NOTES:

1. All tension force directions and connector positions are viewed looking into the shaft coupling.
2. All transducers are built assuming the tension force direction is at the 6:00 position.
   Other tension force directions are available and must be specified at time of order.
3. Available connector positions are 12:00, 1:30, 3:00, 4:30, 6:00, 7:30, 9:00 and 10:30.
4. Tension force direction can be in line with the connector position or be at 45 degree increments from the connector position.

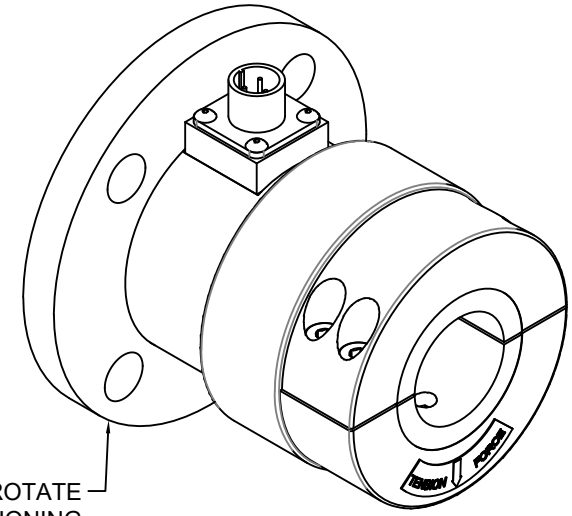

FLANGE CAN ROTATE FOR POSITIONING

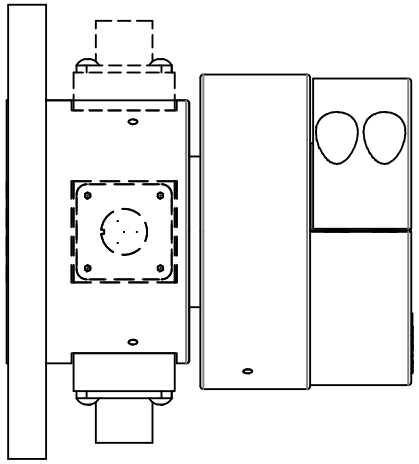

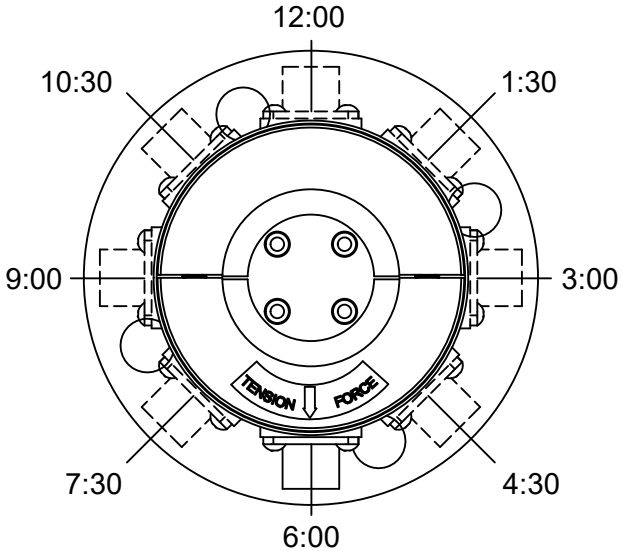

12:00 CONNECTOR POSITION AND 6:00 TENSION FORCE DIRECTION SHOWN

CONNECTOR POSITIONS

LATEST REVISION CHANGE

COPYRIGHT © 2008 DOVER FLEXO ELECTRONICS, ALL RIGHTS RESERVED
COMPANY CONFIDENTIAL
THE SUBJECT MATTER DISCLOSED HEREIN EMBODIES PROPRIETARY INFORMATION WHICH IS THE CONFIDENTIAL PROPERTY OF DOVER FLEXO ELECTRONICS. NONE OF WHICH SHALL BE COPIED, REPRODUCED, DISCLOSED TO OTHERS, PUBLISHED OR USED WITHOUT THE EXPRESS ADVANCE WRITTEN PERMISSION OF A DULY AUTHORIZED AGENT OF THE COMPANY. THIS DOCUMENT IS THE PROPERTY OF DFE AND IS TO BE RETURNED TO THE COMPANY ON DEMAND.

REV | DATE | ECO

DIMENSIONS ARE IN INCHES AND / OR MM. DO NOT SCALE PRINT.

UNLESS OTHERWISE SPECIFIED SURFACE FINISH SHALL BE:

UNLESS OTHERWISE SPECIFIED TOLERANCES ARE

	INCH	(mm)
X	ON DRW	± 1.0
X.X	± 0.04	± 0.1
X.XX	± 0.02	± 0.05
X.XXX	± 0.005	ON DRW.

∠ ± 1.0°

SYMBOLS ARE IN ACCORDANCE WITH ANSI Y14.5, 1982

USED ON

REF.

DR | RV | CHK | ENG | APPD | MAT'L | FINISH

DOVER FLEXO ELECTRONICS
237 PICKERING RD. ROCHESTER NH 03867-4630 USA

TITLE CONNECTOR vs TENSION FORCE MODEL C**FL

SIZE C | SCALE: NTS | SHEET 1 OF 1

DWG NO | REV